PRODUCED BY AN AUTODESK EDUCATIONAL PRODUCT

MACHINING DEVIATIONS FOR LINEAR DIMENSIONS	RANGE	0 - 6	6 - 30	30 - 120	120 - 315	315-1000	1000-2000	2000-4000	ABOVE 4000	RA
	TOLERANCE	±0.1	±0.2	±0.3	±0.5	±0.8	±1.2	±2	±3	~

FOR DIMENSIONAL TOLERANCES OF SHEET METAL PARTS AND WELDED STRUCTURES, REFER STD. RD-227

UNSPECIFIED TOLERANCE FOR LINEAR AND ANGULAR DIMENSIONS REF. IS 2102 (PT-1) (MEDIUM) | QUALITY OF WELD JOINTS REF, RD 230 MEDIUM

VALUES OF SURFACE TEXTURE SHALL BE AS PER COMPANY STD DS. 1012.C.

WELDING SHALL BE CARRIED OUT AS PER IS: 9595-96

STATUS:

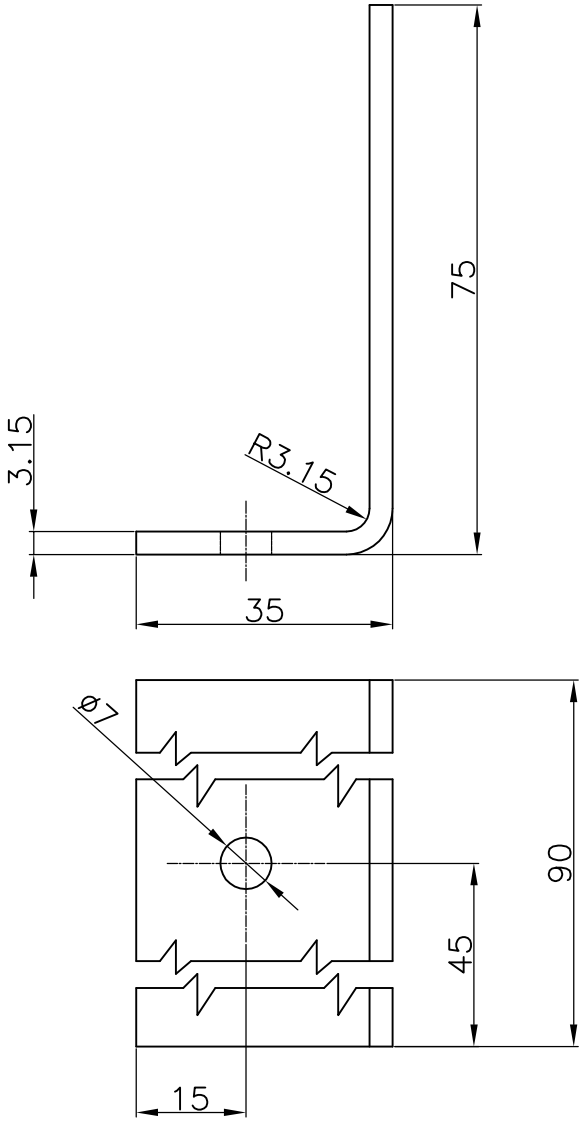

SL.No.	QTY	PART / STOCK No.	DESCRIPTION	SIZE	COMPANY STD./I.S	Wt. (Kg)
			R101593025	105x90x3.15t	IRSM41-97 Gr.I	
					MATERIAL	

ALT.NO.	ECN NO/CHANGES	DATE	BY	CHKD	APPD

PRODUCT	MEMU - 3 PHASE (IR)
REF DRG	
MATERIAL	
HEAT TREAT.	
SURFACE TREAT.	
TITLE	BRACKET

APPD	VS LAKSHMI	27.3.19
REVD	S. JAYARAM	27.3.19
CHKD	SANTHA KUMARI	26.3.19
DRWN	Jagadisha	26.3.19

SCALE	SHEET	Wt.(Kg)
1:1	OF	0

BEML LIMITED
NEW FRONTIERS. NEW DREAMS

DRG No. 849-56140

ALT

A4

GRADE No.	N12	N11	N10	N9	N8	N7	N6	N5	N4	N3	N2	N1
VALUE	50	25	12.5	6.3	3.2	1.6	0.8	0.4	0.2	0.1	0.05	0.025
SYMBOL	~											

SURFACE ROUGHNESS

COPY RIGHT & CONFIDENTIAL
THIS DOCUMENT IS THE EXCLUSIVE PROPERTY OF BEML & CONTAINS CONFIDENTIAL INFORMATION. THIS DOCUMENT OR ITS CONTENTS SHALL NOT BE USED, REPRODUCED OR DISCLOSED IN WHOLE OR IN PART, WITHOUT PRIOR WRITTEN PERMISSION OF BEML. THIS DOCUMENT & ALL ITS COPIES SHALL BE RETURNED TO BEML ON DEMAND
DRAWING RELEASED FROM PLM, PHYSICAL SIGNATURE NOT REQUIRED

PRODUCED BY AN AUTODESK EDUCATIONAL PRODUCT

PRODUCED BY AN AUTODESK EDUCATIONAL PRODUCT

PRODUCED BY AN AUTODESK EDUCATIONAL PRODUCT